Trimble AV59

HIGH ACCURACY FOR AERIAL, LAND AND MARINE APPLICATIONS

The Trimble AV59 GNSS Antenna has been designed to support centimeter level accuracy on aerial, land and marine applications. The rugged 8 hole bulkhead mounting allows the antenna to be used in the most rugged of environments.

ROBUST, LOW-MULTIPATH GPS ANTENNA

The Trimble AV59 GNSS antenna offers support for present and future GNSS signals, including GPS L5, GLONASS, BeiDou and Galileo. This ensures that the antenna will operate with your present and most likely future GNSS receivers.

COMPREHENSIVE GNSS SUPPORT

The antenna resists unwanted signal interference or multipath, which can cause inaccurate measurements. Multipath is caused by signals being reflected from surfaces such as the ground, surrounding trees, or buildings.

FLEXIBILITY

The antenna is an aviation type of design. The bulkhead mounting ensures only the rugged radome is exposed to the elements. This is an ideal design for customers building machine control systems. The antenna can be mounted flush with the vehicle surface or on the top of a pole mount. The TNC connector is located on the underside of the unit ensuring the attached cable is also protected from the environment.

Key Features

- Comprehensive GNSS support, including GPS Modernization signals, GLONASS, BeiDou and Galileo
- Rugged Package ideal for vehicle applications
- Bulkhead Mounting
- Sub-centimeter phase center repeatability

TRIMBLE AV59 GNSS antenna

TECHNICAL SPECIFICATIONS

Broad GNSS Frequency Tracking Band Including:
- GPS: L1, L2, L5
- GLONASS: L1, L2, L3
- Galileo: E1, E2, E5
- BeiDou B1, B2
- SBAS: WAAS, EGNOS, QZSS, Gagan, MSAS, and OmniStar

- Quality signal tracking
- TNC female signal connector
- Small cross-sectional area to reduce wind loading
- Low voltage, low power consumption
- Integral low noise amplifier
- 8 recessed bulkhead mounting holes
- Powered by GNSS receiver via coaxial cable
- Rugged radome designed for machine environments
- High gain for reliable tracking in difficult environments

PHYSICAL AND ELECTRICAL SPECIFICATIONS

Dimensions . . . . . 14.62 cm diameter x 3.89 cm height
. . (5.575 in diameter x 1.53 in height)
Weight . . . . . 0.30 Kg (0.67 lb)
Operating Temperature. . . −40 °C to +85 °C (−40 °F to +185 °F)
Altitude . . . . . ≤16,764 m (55,000 ft)
Finish . . . . . UV resistant white radome with aluminum base
Compliance . . . . . ROHS
Signal gain . . . . . 39 dB
Voltage. . . . . 4.2 V DC to 15 V DC
Polarization . . . . . Right Hand Circular
Axial Ratio. . . . . 3 dB Max @ boresight
Amplifier . . . . . Noise Figure : 2.6 dBMax
Impedance : 50 Ohms
VSWR : ≤ 2.0:1

ENVIRONMENTAL QUALIFICATIONS

Conditions	DO-160D Section	String Category	Description
Temperature Variation	5	A	-55 °C to +85 °C (10/min, 2 cycles
Humidity	-	Method 507.4	MIL-STD-810-F
Shock	-	Method 516.5	MIL-STD-818-F Procedure II
Vibration	-	516.5C.3	MIL-STD-810-F, Section 514.5 CVII

PART NUMBERS

C02992 - WHITE
98042 - GREEN

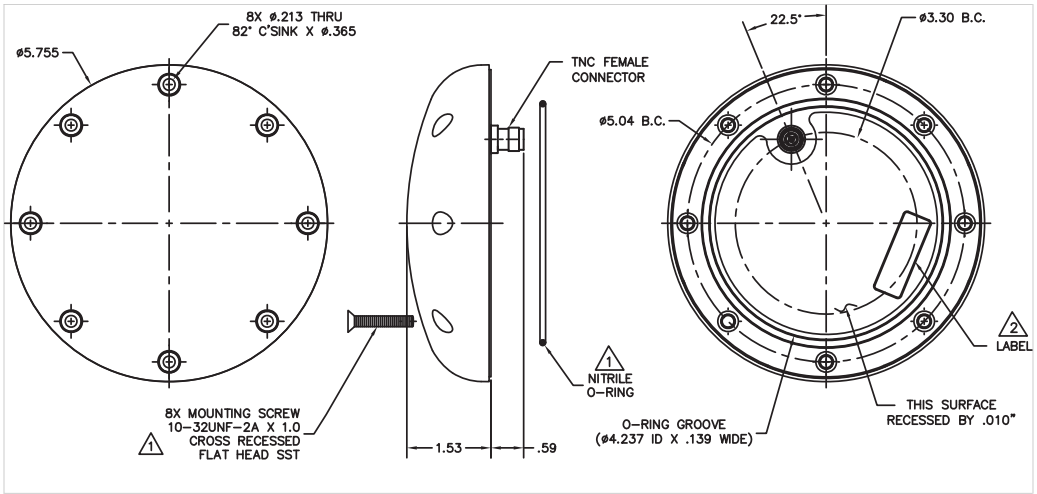

Specifications subject to change without notice.

TRIMBLE
Integrated Technologies
510 DeGuigne Drive
Sunnyvale, CA 94085
Americas & Asia-Pacific
Europe/EMEA

Email: sales-intech@trimble.com

© 2016, Trimble Navigation Limited. All rights reserved. Trimble logo are trademarks of Trimble, registered in the United States and in other countries. All other trademarks are the property of their respective owners. (03/16)